ANSWER KEY.

ZornScience
zornscience.org

Crowded Cups: A Competition Lab

Biology | ANSWER KEY

Sample answers and data. Accept answers that match the group's own data and reasoning.

Draft lab. This lab has not been tested in a classroom yet. Your teacher may change some steps, times or amounts.

The Puzzle

A gardener packs a cup with radish seeds, hoping for more radishes. Does crowding help or hurt each plant? And is a radish hurt more by other radishes (**intraspecific competition**) or by a different species, like grass (**interspecific competition**)?

Question

How does the number and type of neighbors affect the growth of a radish plant?

Safety

- Wear gloves when handling potting mix. Do not breathe in the dust.
- Do not eat seeds or plants. Wash your hands after the lab.

Materials (per group)

- 4 cups (16 oz) with drain holes, labeled 2R, 6R, 12R, and 2R+G
- Potting mix, tray to catch water
- About 30 radish seeds and 15 ryegrass seeds
- Measuring cup for water, ruler, scissors
- Balance (0.01 g), paper towels

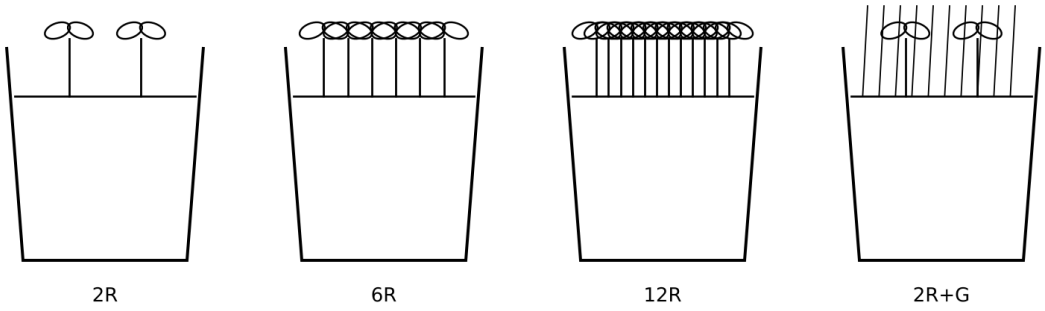

Four planting designs. Cup 2R+G has 2 radishes and 10 ryegrass plants.

CC BY-NC-SA 4.0 | zornscience.org

Before the Lab

1. Predict: which cup will have the heaviest **individual** radishes? Which will have the most **total** radish mass? Explain.

   Answers vary. Expected: the 2R cup has the heaviest individual radishes; the 12R cup has the most total mass, but not 6 times as much as 2R.

Procedure

Day 1

1. Fill each cup with potting mix to 2 cm below the rim. Water until it drips from the bottom.
2. Plant radish seeds 1 cm deep, spread evenly: plant one extra seed for every plant you need (for example, 4 seeds in cup 2R). In cup 2R+G, also scatter 15 ryegrass seeds and cover them lightly.
3. Put all cups under the same light. Water each cup with the same amount whenever the surface is dry.

Day 7

1. Thin each cup to the target number by snipping the extra seedlings at the soil line: 2, 6, 12, and 2 radishes plus 10 grass plants.

Day 21 (harvest)

1. Cut every radish plant at the soil line. Do not include grass.
2. Weigh all the radish shoots from each cup together. Record the total mass, then divide by the number of radishes.

Data

Table 1. Radish shoot mass

Cup	Radishes	Neighbors	Total radish mass (g)	Mass per radish (g)
2R	2	1 radish	**4.8**	**2.4**
6R	6	5 radishes	**7.8**	**1.3**
12R	12	11 radishes	**8.4**	**0.70**
2R+G	2	1 radish + 10 grass	**3.2**	**1.6**

2. Make a bar graph of mass per radish for the four cups.

   Expected graph: bars decrease from 2R (2.4 g) to 6R (1.3 g) to 12R (0.70 g). The 2R+G bar (1.6 g) is lower than 2R but higher than 12R (sample).

CC BY-NC-SA 4.0 | zornscience.org

Analysis

3. How did crowding with other radishes affect the mass of each radish? Use numbers.

More radish neighbors meant smaller radishes: 2.4 g each with 1 neighbor, 1.3 g with 5, and 0.70 g with 11 (sample).

4. Compare total radish mass in cups 2R, 6R, and 12R. Did 6 times as many plants make 6 times as much mass? Explain why or why not.

No. 12R had 6 times as many plants as 2R but only about 1.75 times the total mass (8.4 g vs 4.8 g). The cup has a limited amount of light, water and nutrients, so total mass levels off, like a carrying capacity.

5. Name two resources the plants in a crowded cup compete for. Where does each competition happen (above or below the soil)?

Light (above ground, leaves shade each other) and water or nutrients (below ground, roots overlap).

6. Ten grass plants reduced radish mass less than 11 radish neighbors did (sample data). Suggest one reason, using the idea of niches.

Grass and radish use resources a bit differently (for example, grass has shallow fibrous roots and narrow leaves), so their niches overlap less. Members of the same species have the same needs, so intraspecific competition is stronger.

7. Claim, evidence, reasoning: Is a radish hurt more by its own species or by grass?

Claim

Answers depend on class data. Sample claim: a radish is hurt more by other radishes than by the same number of grass plants.

Evidence

Radishes with 11 radish neighbors averaged 0.70 g; radishes with 1 radish and 10 grass neighbors averaged 1.6 g (sample).

Reasoning

Individuals of the same species need the same resources in the same places, so niche overlap and competition are greatest within a species.

CC BY-NC-SA 4.0 | zornscience.org